THALES

Cinterion® LGA DevKit

User Guide

Version: 04
DocId: lga_devkit_ug_v04

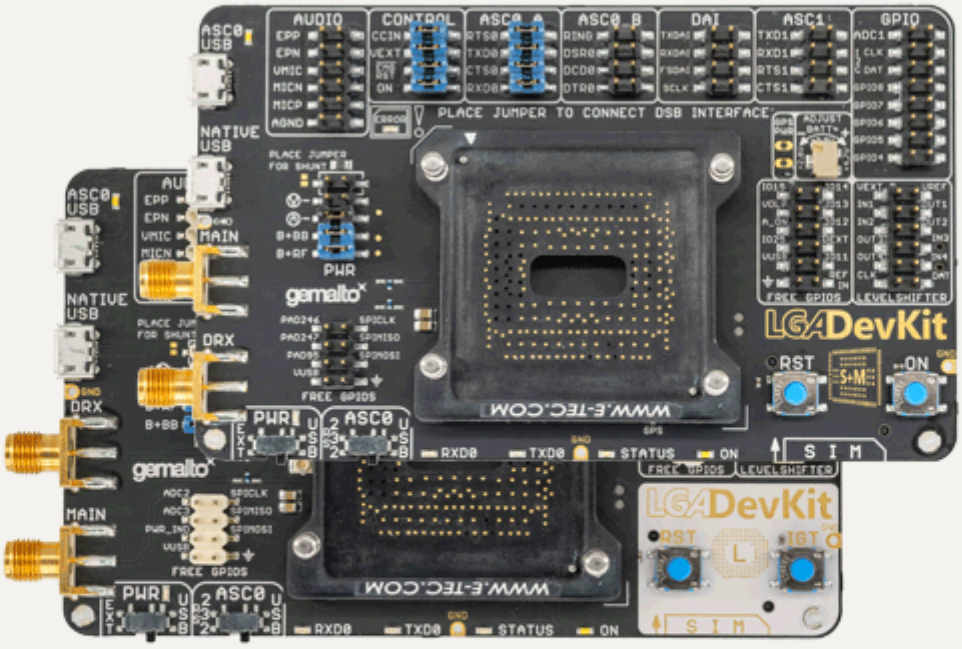

User Guide:	**Cinterion® LGA DevKit**
Version:	**04**
Date:	**2021-01-12**
DocId:	**lga_devkit_ug_v04**
Status:	**Public / Released**

GENERAL NOTE
THIS DOCUMENT CONTAINS INFORMATION ON THALES DIS AIS DEUTSCHLAND GMBH ("THALES") PRODUCTS. THALES RESERVES THE RIGHT TO MAKE CHANGES TO THE PRODUCTS DESCRIBED HEREIN. THE SPECIFICATIONS IN THIS DOCUMENT ARE SUBJECT TO CHANGE AT THE DISCRETION OF THALES. THE PRODUCT AND THIS DOCUMENT ARE PROVIDED ON AN "AS IS" BASIS ONLY AND MAY CONTAIN DEFICIENCIES OR INADEQUACIES. THALES DOES NOT ASSUME ANY LIABILITY FOR INFORMATION PROVIDED IN THE DOCUMENT OR ARISING OUT OF THE APPLICATION OR USE OF ANY PRODUCT DESCRIBED HEREIN.

THALES GRANTS A NON-EXCLUSIVE RIGHT TO USE THE DOCUMENT. THE RECIPIENT SHALL NOT COPY, MODIFY, DISCLOSE OR REPRODUCE THE DOCUMENT EXCEPT AS SPECIFICALLY AUTHORIZED BY THALES.

Copyright © 2021, THALES DIS AIS Deutschland GmbH

Trademark Notice
Thales, the Thales logo, are trademarks and service marks of Thales and are registered in certain countries. Microsoft and Windows are either registered trademarks or trademarks of Microsoft Corporation in the United States and/or other countries. All other registered trademarks or trademarks mentioned in this document are property of their respective owners.

Contents

1 Introduction 5
1.1 Feature and Benefits 5
1.2 Supported Products 6
1.3 Package Content 7

2 Quickstart 9
2.1 Mounting the LGA DevKit Socket 9

3 LGA DevKit Overview 10
3.1 Top and Underside View 10
3.2 Block Diagram 11

4 LGA DevKit Interfaces 12
4.1 USB 12
4.2 SIM 12
4.3 Pin Headers 13
4.3.1 Default Configuration 13
4.4 ON Button: Module Start and Power Down 14
4.5 RST Button: Module Reset 14
4.6 ASC0 Switch: Module UART Interface Selection 14
4.7 PWR Switch: Power Source Selection 14
4.8 Free Level Shifters 15
4.9 LEDs 15
4.10 Patch Field 15
4.11 RF Antenna 16
4.12 Power Supply 17
4.12.1 Supply Current Measurement 17
4.12.2 External Reference Supply 18

5 General Characteristics 19

6 Operating the LGA DevKit with a DSB 20
6.1 LGA DevKit on DSB-Mini 20
6.2 LGA DevKit on DSB75 21

7 Module Specific Configuration Settings 22
7.1 BGS1 and BGS2 Operation 22
7.2 BGS12 Operation 22
7.3 EMS31 Operation 22
7.4 ENS22 Operation 23

8 LGA DevKit Firmware Update 24
8.1 Connect Serial Interface 24
8.2 Setup Terminal Program 25
8.3 Open Connection and Version Check 26
8.4 Update Procedure 26

9 Document Information 28
9.1 Revision History 28
9.2 Related Documents 28
9.3 Safety Precaution Notes 29
9.4 Regulatory Compliance Information 29

10 Appendix 30
10.1 LGA DevKit SM 30
10.1.1 Placement 30
10.1.2 Schematics 31
10.2 LGA DevKit L 34
10.2.1 Placement 34
10.2.2 Schematics 35
10.3 Errata/Troubleshooting 38

1 Introduction

The Cinterion® LGA DevKit is designed as a generic development adapter for Cinterion® LGA modules. With the LGA DevKit it is no longer necessary to connect the Cinterion® evaluation modules to an adapter for test and development purposes.

The LGA DevKit may operate stand-alone without the need of any further tools or devices, or it can be operated with a port extender, for instance the DSB75 or DSB-Mini as an adapter between the module and further external applications.

The LGA DevKit is available in two variants:
- SM supports the complete industrial platform modules
- L supports most of the industrial plus platform modules

Either one of the LGA DevKit variant (SM or L) needs to be ordered together with the LGA DevKit socket, leaving the option to reuse the socket for the other LGA DevKit variant.

1.1 Feature and Benefits

- LGA DevKit socket supports four different module footprints with different LGA pad counts for industrial/industrial plus platform modules:
  With LGA DevKit SM: LGA106, LGA114, and LGA120
  With LGA DevKit L: LGA156
- Future proof, ready for new, upcoming modules
- Stand-alone: Get the LGA module up and running without additional tooling
- Supports DSB75/DSB-Mini as port extender
- UART via USB VCP, and/or native USB communication
- Direct module signal access with complete interruption for deep level investigation
- Real module current consumption measurement, no additional leakage current
- Powered via USB or external devices (e.g., DSB75/DSB-Mini)
- Adjustable module supply level 2.8...4.5V
- VEXT self-adjustment for level shifter reference level
- Further supported interfaces: SPS, SIM2, ASC1, Audio, GPIO, GNSS
- Error detection: Wrong or wrongly oriented modules, as well as shorts on module, preventing damages
- Clear & easy concept for usage and signaling
- Cost minimized: LGA DevKit socket usable for both LGA DevKit versions (SM and L)
- QR code scanning leads users to all the information necessary for usage

1.2 Supported Products

The following table lists modules that are supported by the LGA DevKit variants SM and L, depending on the module's pad count (i.e., module's footprint).

Table 1: Supported products

LGA DevKit SM		**LGA DevKit L**
S (LGA 106, LGA 114)	**M (LGA 120)**	**L (LGA 156)**
BGS12	BGS8	PDS5
BGS2	EHS6	PDS6
BGS5	EHS8	PLS62-W
EHS5	ELS61	PLS8
ELS31	ELS81	
EMS31		
Cinterion® ENS22		
EXS62		
EXS82		

1.3 Package Content

The following packages are available for the LGA DevKits. Normally an LGA DevKit SM or L would be used with the LGA DevKit socket SML:

- Cinterion® LGA DevKit SM (Ordering number: L30960-N0111-A100)
  - Base PCB for the industrial platform modules
  - USB and SMA cable
  - An ultra-wideband high efficiency antenna
  - A bag of jumpers ~25pcs
  - A quick start guide
- Cinterion® LGA DevKit L (Ordering number: L30960-N0112-A100)
  - Base PCB for the industrial plus platform modules
  - USB and SMA cable
  - An ultra-wideband high efficiency antenna
  - A bag of jumpers ~25pcs
  - A quick start guide
- Cinterion® LGA DevKit socket SML (Ordering number: L30960-N0110-A100)
  - The needle socket fitting on both PCB versions SM and L
  - Screws, fixing frames, retention lid

Figure 1 shows the LGA DevKit package contents, whereas Figure 2 shows how the LGA DevKit socket SML can be used for both LGA DevKit variants S and M.

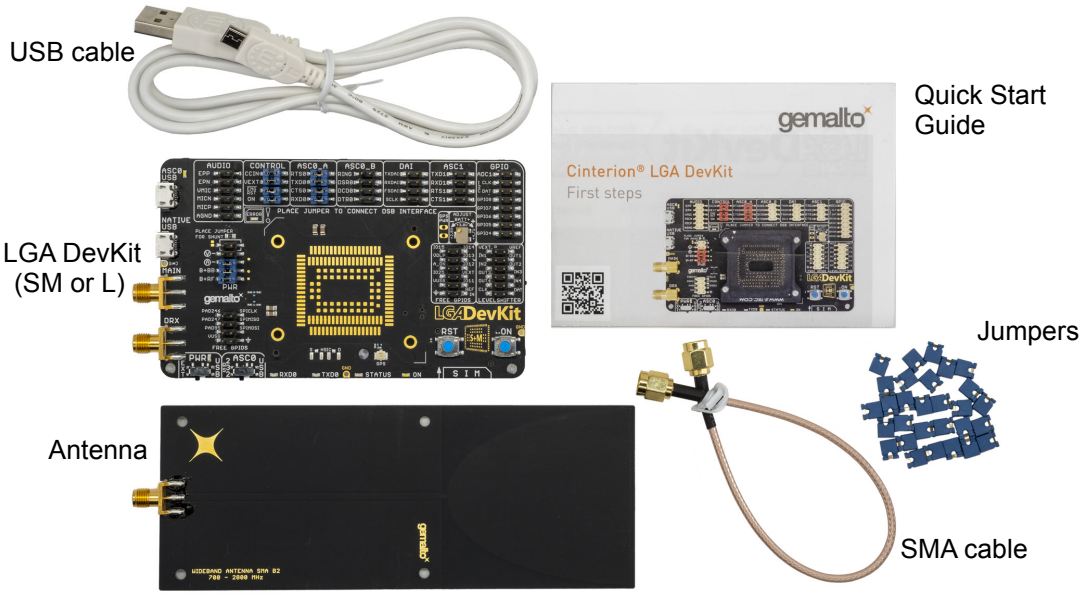

Figure 1: LGA DevKit SM package content

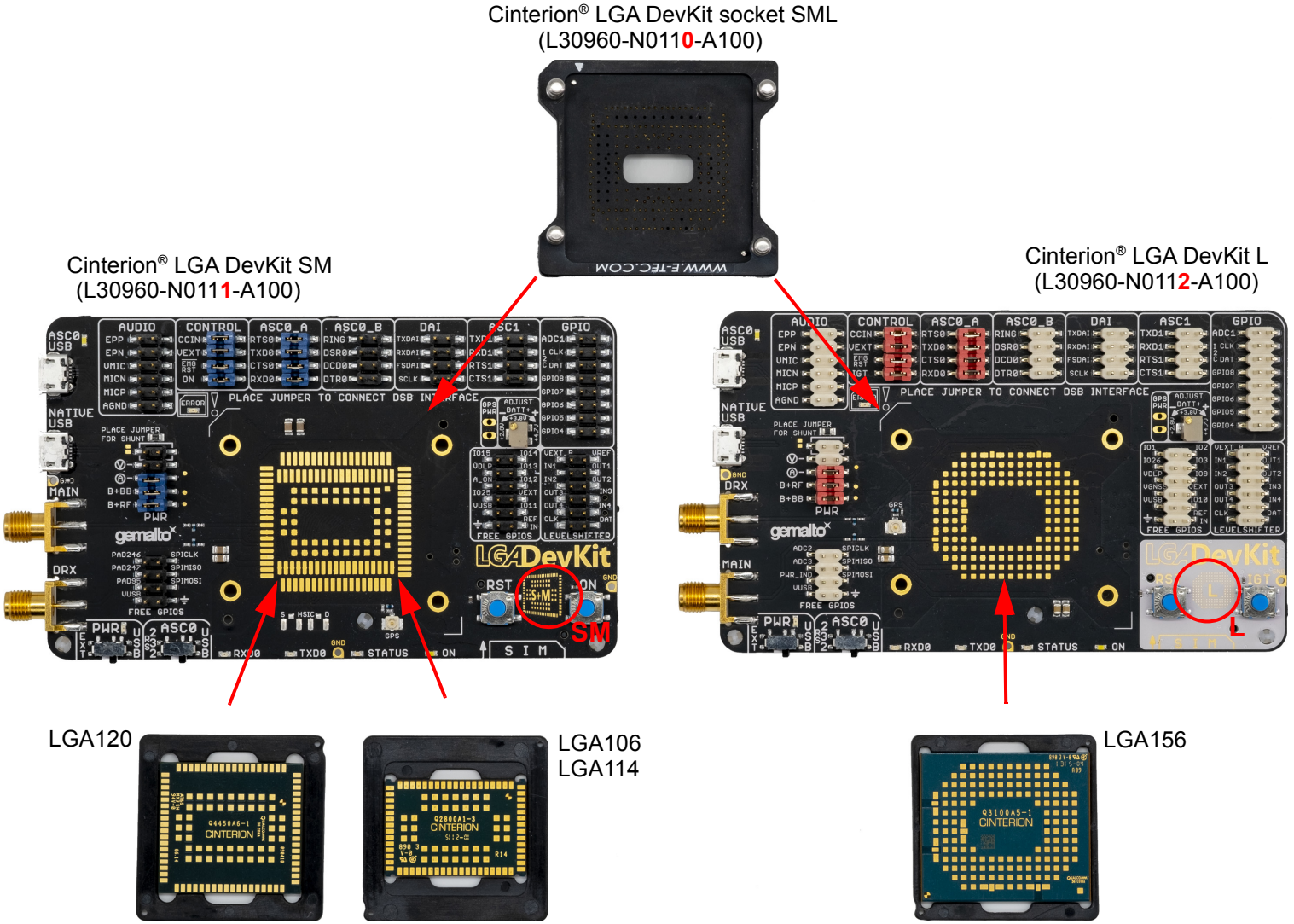

Figure 2: LGA DevKit socket SML with LGA DevKit variants SM and L

2 Quickstart

Please complete the following steps to quickly get started with your LGA DevKit.

- Mount the LGA DevKit socket onto the LGA DevKit (for details see Section 2.1).
- Insert the fixing frame and then the module into the socket and close the retention lid by pressing it down and turning it clockwise.
- Connect the provided antenna to the SMA connector named "MAIN".
- Check that the jumpers are set to their default delivery positions.
- Connect your host PC to either the USB or the USB VCP connector (depending on the module). In case of USB VCP connections, install FT232R drivers.
- Set the switches PWR & ASC0 at the DevKit's lower right corner to "USB". Now, the green "PWR" LED lights up.
- Shortly press the ON button to start the module. Now, the white "ON" LED lights up

The red "ERROR" LED may indicate issues that should be corrected. For details see Section 4.9.

Note: By scanning the QR code at the underside of the LGA DevKit you will also find further information, videos and available drivers.

2.1 Mounting the LGA DevKit Socket

Before operating, the socket has to be mounted onto the LGA DevKit with 4 screws. Scanning the QR code on the DevKit's underside and/ or the quick start guide will lead you to the DevKit's web home where you find a short introduction and video on how to do this.

The white printing on the DevKit shows how the socket shall be orientated and mounted. You can quickly adapt to different module footprints by using dedicated fixing frames. All contacts have low-resistivity needles.

Note: The module's thermal encapsulation inside the socket increases the thermal resistance (Rth). Thus, you need to be aware that the board temperature may rise quite quickly until automatic thermal shutdown takes effect, especially at higher environmental temperatures or high radio output power.

3 LGA DevKit Overview

3.1 Top and Underside View

Figure 3 and Figure 4 show the top and underside view of the of the LGA DevKit SM variant.

Please note that both SM and L variants of the LGA DevKit are identical - except or the MAIN and DIV antenna connectors that are interchanged, and the footprint indicators showing the different LGA module footprints.

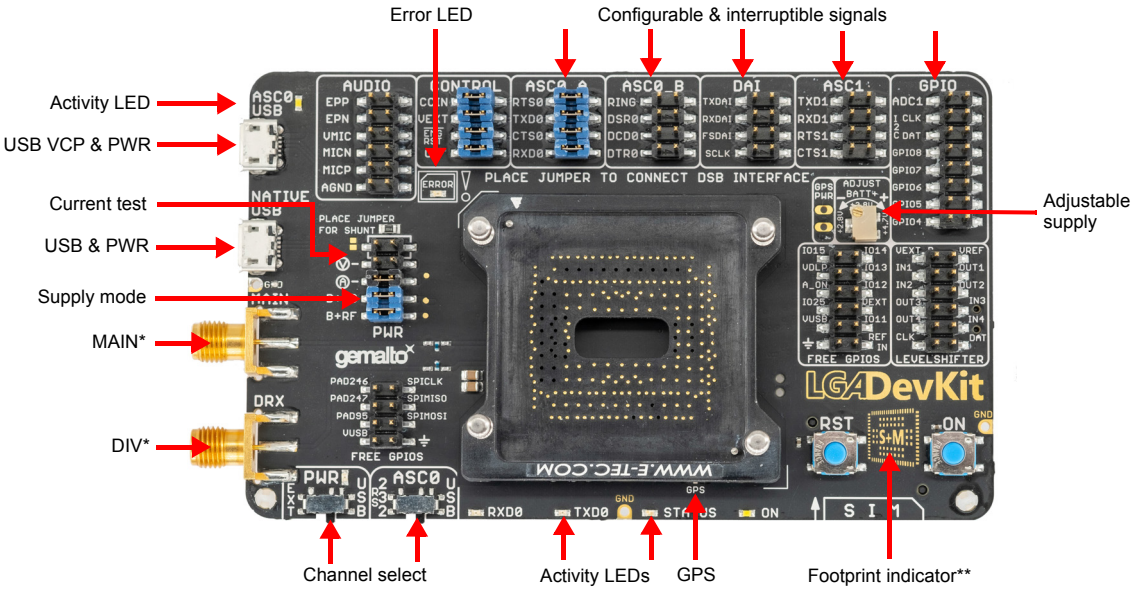

* = MAIN and DIV antenna connectors are interchanged with the LGA DevKit **L** variant
** = Footprint indicator shows LGA156 footprint with the LGA DevKit **L** variant

Figure 3: LGA DevKit SM top view

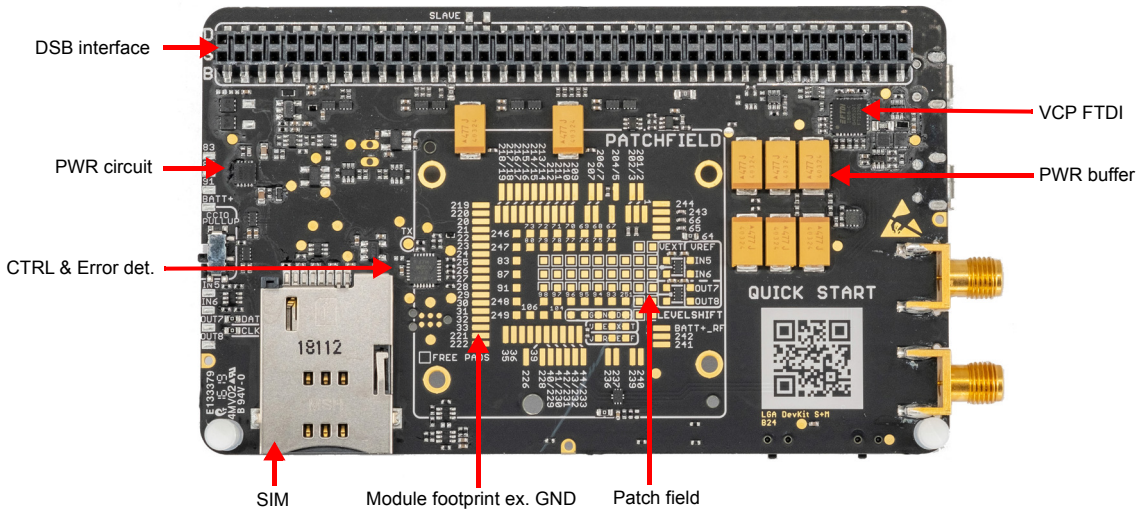

Figure 4: LGA DevKit SM underside view

3.2 Block Diagram

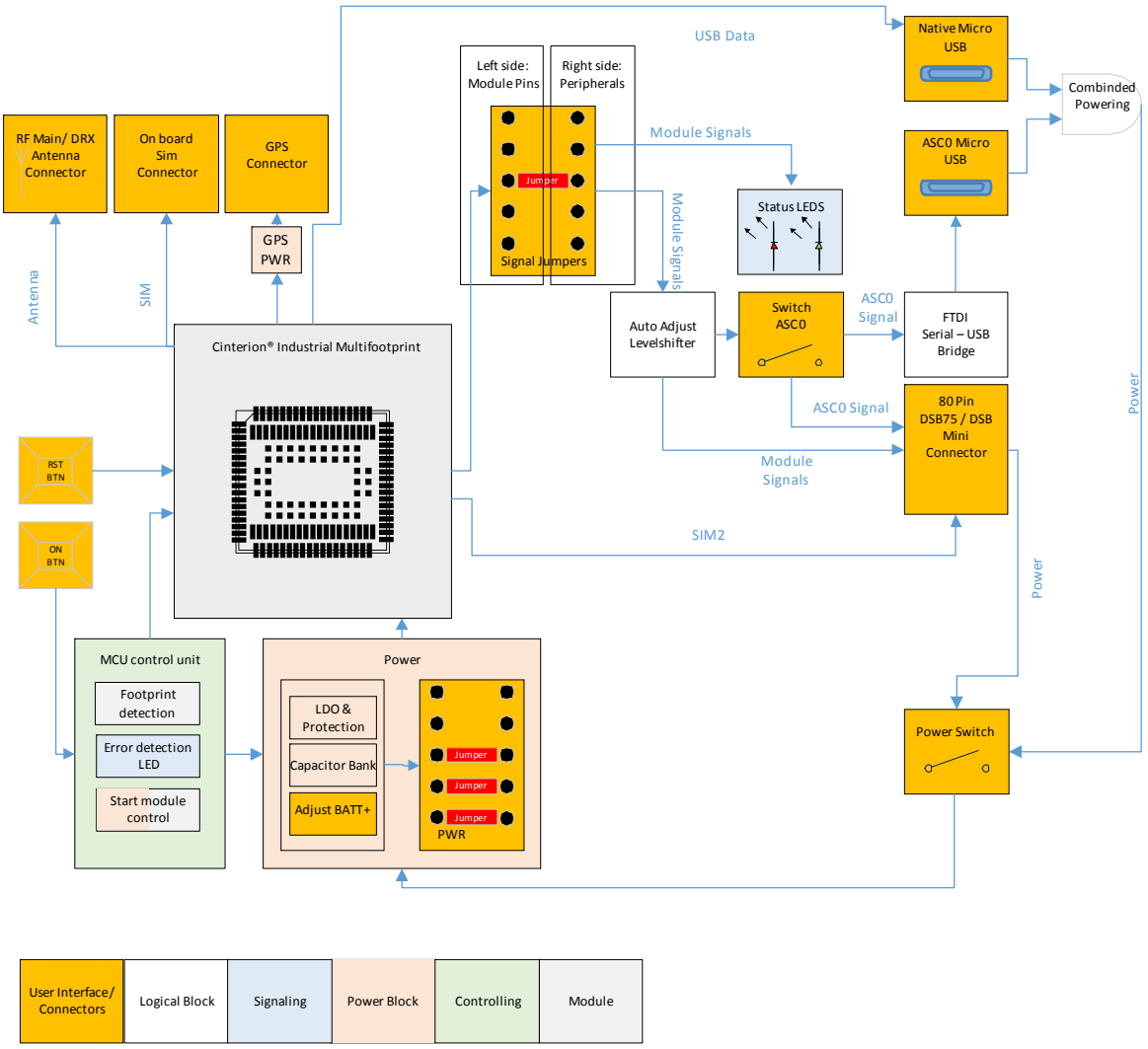

Figure 5: LGA DevKit block diagram

4 LGA DevKit Interfaces

4.1 USB

The LGA DevKit comes with two USB interfaces supporting power supply and serial communication. You may choose to setup communication via a module's USB port and/or a module's UART (ASC0) port via FTDI232R VCP.

- Both USB ports can be used in parallel while power is sourced from both ports.
- The native USB power is isolated from the VCP USB power by a diode, meaning that the VCP USB power does not feedback to the native USB power, but vice versa. This should be taken into account when supplying the LGA DevKit from different USB power sources, depending on the voltage levels there could be a power feedback from native USB to VCP USB.
- In case of marginal USB power supply both USB ports should be used to improve power capabilities.

Note: The modem's USB driver can be downloaded from the LGA DevKit's web page that can be reached by scanning the QR code.

4.2 SIM

On the LGA DevKit's underside you find a SIM card holder that is connected to the module's regular SIM interface lines, except for the CCIN line where the (default) jumper needs to be set for CCIN at the CONTROL pin headers (see Section 4.3). However, some modules come with an additional SIM interface. This can be accessed in conjunction with a DSB75/DSB-Mini (as port extender) to support dual SIMs - with the DSB75/DSB-Mini serving as the second SIM interface.

Some Cinterion® modules require additional components at the SIM interface, for instance pull-up resistors managed by the DevKit's control logic. These can be overridden by setting a switch on the DevKit's underside - see Figure 6. For modules requiring a CCIO pull up resistor this switch should be set to "CCIO PULLUP" (see Section 7.3).

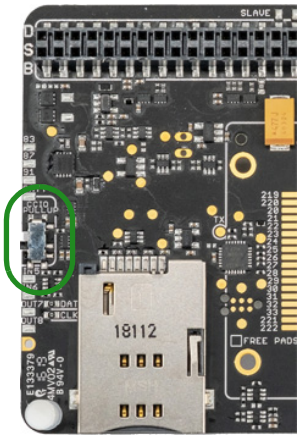

Figure 6: SIM settings

4.3 Pin Headers

The pin headers at the top side can be used to setup connections between modules and possible on board peripherals. Thus, pin headers having signal names at their left side only, namely the pin headers AUDIO, CONTROL, ASC0_A, ASC0_B, DAI, ASC1, GPIO, and PWR, can be bridged by jumpers. All of these pin headers have the module's signal name on their left side (marked yellow in Figure 7), whereas the right side corresponds to peripherals like level shifters or the DSB connector (marked green in Figure 7).

- Placing a jumper connects a line through a level shifter to the associated pin at the 2x40 pin connector at the underside of the LGA DevKit (and thus to a connected DSB75/DSB-Mini). See also Figure 5.
- Not placing a jumper leaves a module signal open.

External periphery can also be connected to all accessible module signals directly. When connecting other external periphery to the pin headers pay attention not to violate the maximum module ratings.

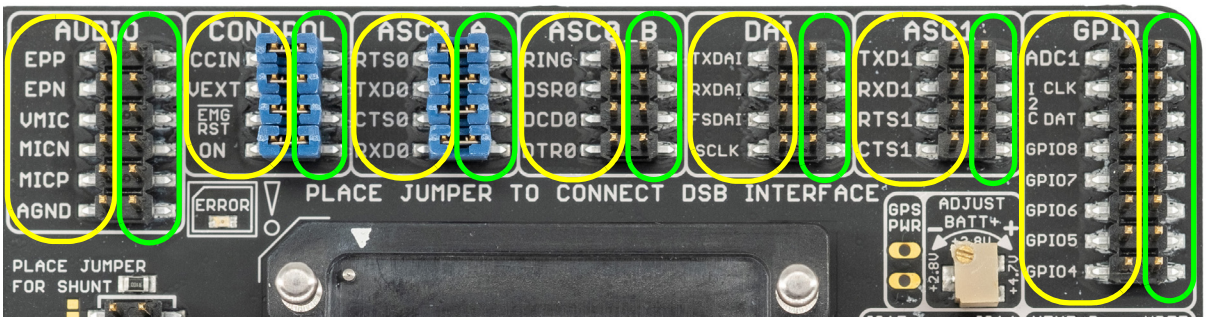

Figure 7: Pin headers

4.3.1 Default Configuration

Figure 8 shows the factory default jumper and switch positioning.

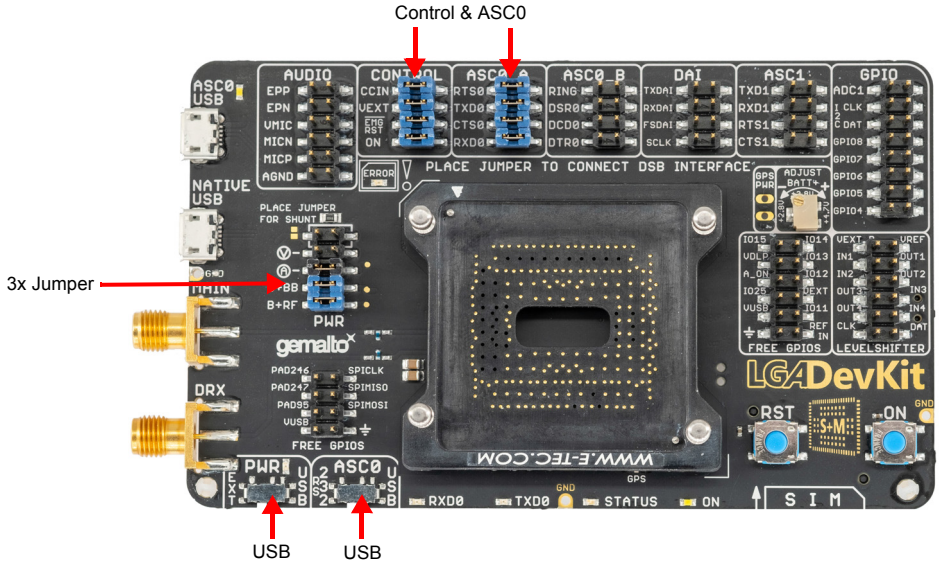

Figure 8: Default jumper and switch configuration

Please also verify that the SIM switch at the underside is set to default "CCIO Pullup disabled".

4.4 ON Button: Module Start and Power Down

Pushing the ON button shortly (i.e., <0.5s), the LGA DevKit starts up and initially analyses the mounted module orientation and type. In case both are recognized and correct, the module is started using specific start pulses. The white LED indicates the module's VEXT state as high.

Also, it is possible to start up the module by toggling DTR on the DSB75/DSB-Mini RS232 connector.

Pushing the ON button for more than 2s shuts down the LGA DevKit's power supply, and the module's power supply is interrupted regardless of its current state.

4.5 RST Button: Module Reset

Pushing the RST button pulls down a module's EMERG-RST/OFF signal, thus forcing it into reset or off state. Please note that this functionality is only available if the (default) jumper is set for EMERG_RST at the CONTROL pin block (see Section 4.3).

4.6 ASC0 Switch: Module UART Interface Selection

The "ASC0" switch selects the module's UART communication interface either via USB VCP (FTDI232R) or via "RS232" D-Sub interface on the DSB75/DSB-Mini.

Changing this from "USB" to "RS232" during operation resets the FTDI VCP bridge in order to release the signal lines, thus leading to a USB VCP disconnect on the host PC side.

4.7 PWR Switch: Power Source Selection

The "PWR" switch selects the preferred power source, both sources can be connected at the same time, but do not supply the LGA DevKit in parallel.

When "USB" is set, both LGA DevKit USB ports will contribute to the overall power supply with a connected DSB75/DSB-Mini having to be powered separately. Setting "EXT", the power is supplied from the DSB75/DSB-Mini interface.

Please note that there is a dedicated power supply for the GPS antenna. To use this, the two pins at the GPS_PWR field will have to be soldered and connected by jumper.

4.8 Free Level Shifters

The LGA DevKit provides 8 free level shifters, with 4 placed & connected at the patch field on the underside, and 4 connected to the pin header "LEVELSHIFTER". The level shifters on the pin header are referenced to the module's Vext, and Vref that by default corresponds to 3V or to "REF IN" if connected (see Section 4.12.2).

These level shifters can be used to shift signals that are not available at the DSB connector.

4.9 LEDs

The LGA DevKit LEDs have the following meaning:

LED	Meaning
RED	Blinking continuously: Module is inserted wrongly oriented, not powered, turn by 180° Blinking 2 times: No module inserted, not powered Blinking 3 times: A module not supported by footprint is inserted, not powered, change module Lighting: Overcurrent detected in module power pass, change module, restart LGA DevKit's power supply
GREEN	Module TXD0 activity, low active
GREEN PWR	Sufficient supply level, but not switched on
AMBER	Module RXD0 activity, low active
BLUE	Module state GPIO5 / LED (if a jumper is set for GPIO5 at the GPIO pin headers)
WHITE ON	Module started, V180/300 is at high level (if the (default) jumper is set for VEXT at the CONTROL block)
WHITE USB	TX/RX activity on USB VCP

4.10 Patch Field

A small patch field is available at the LGA DevKit's underside. If required, you can add simple components (LED, Transistors etc.) here. All module signals, except USB and RF are accessible at the underside by the labeled pads.

4 level shifters are accessible close to the patch field as well with the reference Vext and Vref. The Vref related level shifter connections can also be accessed via four additional pads at the left underside of the LGA DevKit where additional pins may be soldered.

Attention: The warranty may be lost if the patch field is soldered.

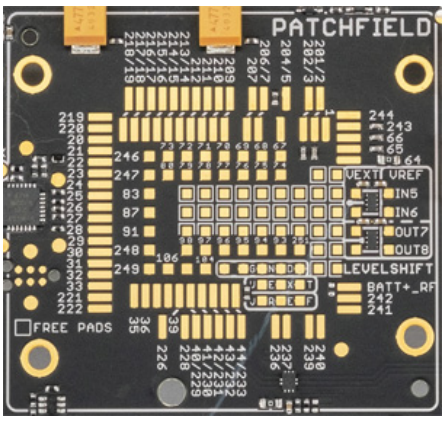

Figure 9: Patch field

4.11 RF Antenna

The LGA DevKit supports three antenna interfaces. The two SMA connectors "MAIN" and "DRX" are used for radio transmission. The GNSS interface is supported by an U.FL connector named "GPS".

All antenna interfaces have additional ESD protection implemented.

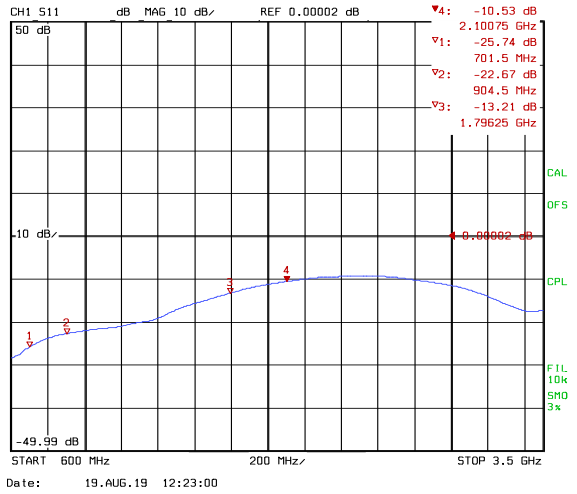

Figure 10: S11 MAIN antenna input return loss transmit direction (with socket)

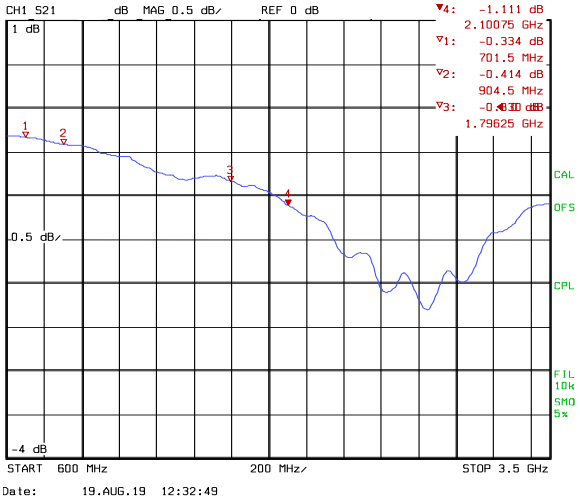

Figure 11: S21 MAIN antenna insertion loss transmit direction (with socket)

The LGA DevKit package includes a broad band high efficiency PCB antenna that can be used with the DevKit for all radio band combinations.

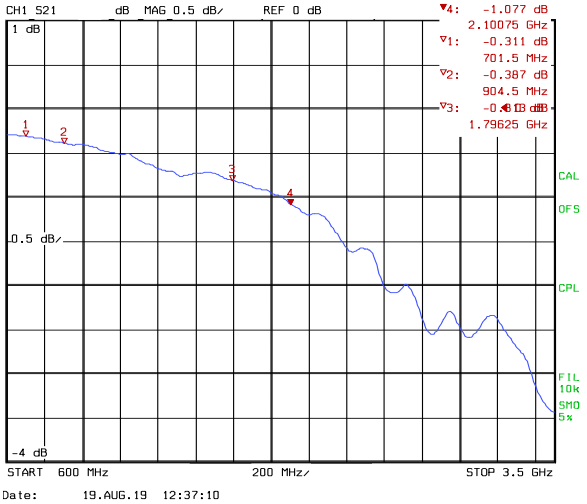

Figure 12: S12 MAIN antenna insertion loss receive direction (with socket)

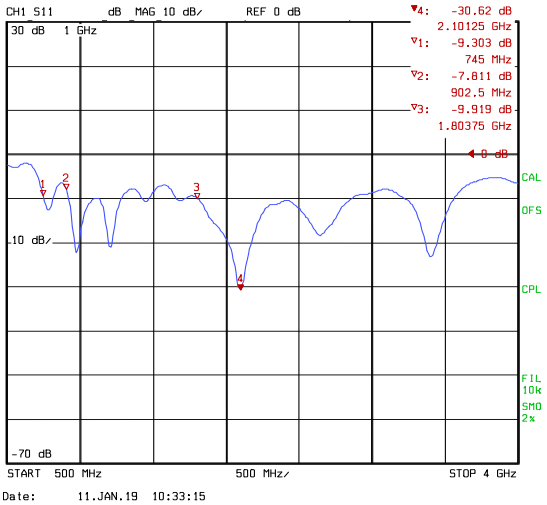

Figure 13: Antenna S11

4.12 Power Supply

The LGA DevKit can be supplied through one or two USB ports that should be in the range of 5V +-5%, and/or externally by the DSB75/DSB-Mini. The modules supply level can be adjusted in the range between 2.8…4.8V by setting the variable resistor at the DevKit's top side. The DevKit power supply path is short protected with ~2A. In case of overcurrent the power path will be interrupted and the red LED lights up until the power has been reset.

As a recommendation the LGA DevKit should be supplied with 5V/1A over one or two USB ports. The onboard bypass capacitors should buffer enough energy to support short 2G peak currents up to 2.5A.

4.12.1 Supply Current Measurement

The LGA DevKit supports three methods to measure the current consumption of the inserted module.

- Measure the voltage across the on board 100 mOhm shunt resistor
- Measure the current by a current meter
- Power the module by an external power supply e.g. power analyzer

All options require a jumper placed on the 4th "BB" and 5th "RF" row for connecting baseband and radio. Those two jumpers also allow to measure the current separately for the BB and RF path.

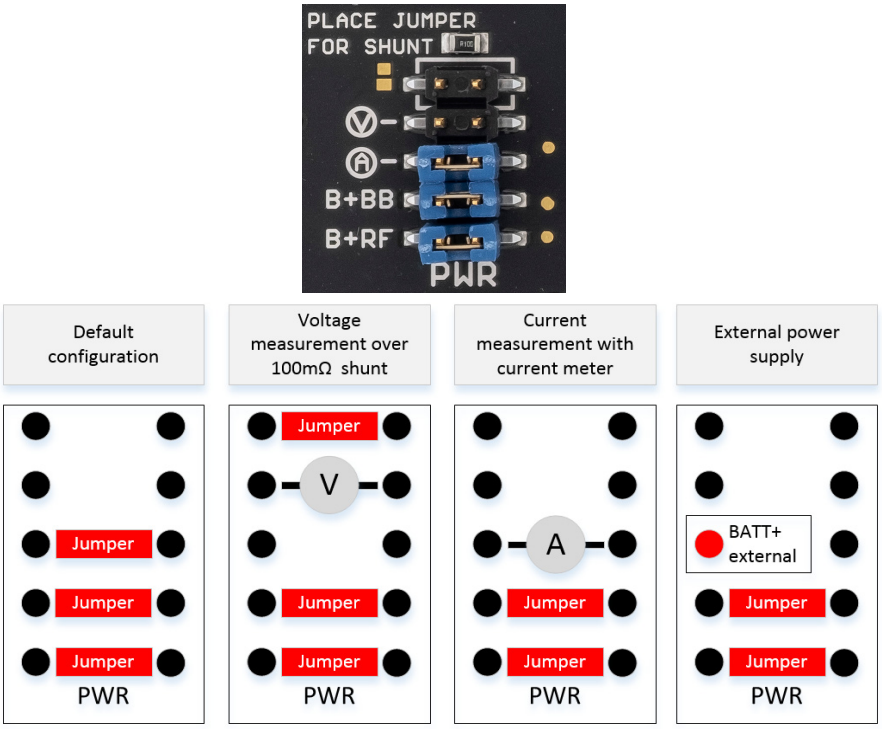

Figure 14: Supply current measurements

Note: When measuring with a current meter, the meter's internal resistance may cause a high voltage drop, forcing the module to shut down. This can be avoided by measuring the voltage cross the shunt. The current option is suitable for specialist power meter supplies, whereas the voltage option is suitable for common voltage meters.

4.12.2 External Reference Supply

To drive/operate the LGA DevKit's interfaces at certain voltage levels, an external reference voltage may be connected. By default, i.e., without an external reference voltage connected, the interface operates at 3V to meet the DSB75/DSB-Mini requirements. But if it is required to operate the interface at another voltage, an external source in the range between 1.2V...5V can be connected to "REF IN" and "GND" as shown in Figure 15.

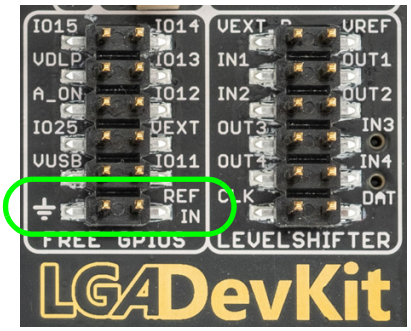

Figure 15: External reference supply and pin header for free level shifter

Please note that this jumper should not be set when the LGA DevKit is connected to a DSB.

5 General Characteristics

The following table lists absolute maximum ratings for the LGA DevKit. Please note that violation of these limits may cause permanent damage to the LGA DevKit.

Table 2: Absolute maximum ratings

Parameter	Min	Max	Unit
Voltage on USB ports	-0.3	5.5	V
Voltage on DSB port	-0.3	5.5	V
Voltage on signal pin header, depending on used module	-0.3	2.1	V
Current signal pin header, depending on used module	-10	+10	mA
Voltage on external reference	-0.3	6	V
Socket single contact continues current		2	A

The following table lists recommended operating and environmental conditions for the LGA DevKit.

Table 3: Operating and environmental conditions

Parameter	Min	Max	Unit
Recommended operating condition	0	45	°C
Storage temperature	0	85	°C
Supply voltage on USB port	4.75	5.25	V
Supply current capability on USB port	1		A
Socket single contact resistance (Rev1)	80	120	mOhm
Socket single contact resistance (Rev1.1)	25	35	mOhm
Socket spring life cycle		100,000	

6 Operating the LGA DevKit with a DSB

6.1 LGA DevKit on DSB-Mini

The LGA DevKit supports a 2x40pin connector at its underside, compatible to the DSB75/DSB-Mini. A DSB may be a port extender for an RS232 interface, a second SIM or an analog audio interface. When operating the LGA DevKit with a DSB the following settings can be adjusted.

- Use the "PWR" switch to select the power source. If you select "EXT", the DevKit expects the power on the DSB connector. If you select "USB", the DevKit is powered by its USB ports, and the DSB expects a separated power source.
- Use the "ASC0" switch to select the first UART. If you select "RS232", the modules ASC0 is conducted to the DSB and can be accessed on the D-SUB connector. If you select "USB" the UART can be accessed via USB VCP port
  Note that the USB VCP bridge will be in reset state while "RS232" is activated. As a consequence the interface is de-enumerated on host side.
  Also note that in order to reliably switch between the USB VCP bridge and the RS232 interface, the DSB Mini requires an additional 47k pull up resistor. See red box in Figure 16 for placement.

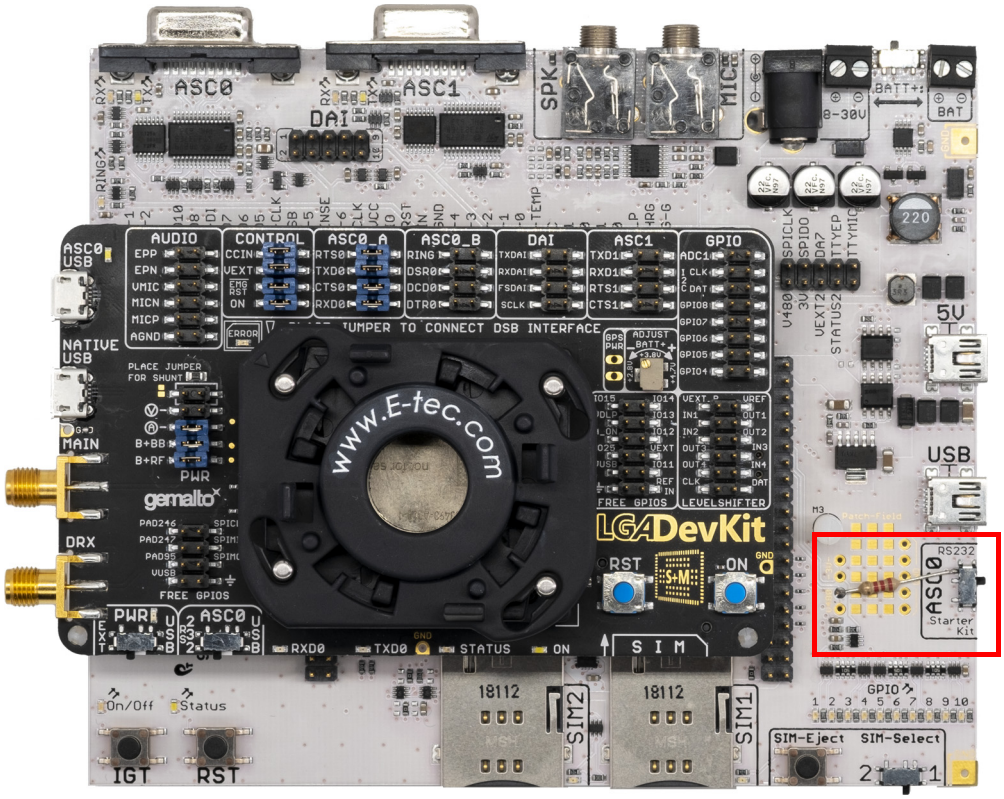

Figure 16: LGA DevKit on DSB-Mini

6.2 LGA DevKit on DSB75

To operate the LGA DevKit with the DSB75 please complete the following steps:

- Mount the LGA DevKit onto the DSB75.
- Insert the module.
- Set "PWR" and "ASC0".
- Check if all jumpers are placed at the pin header: CONTROL, ASC0_A and PWR
- Connect the host PC to DSB75 via Sub-D.
- Connect power to DSB75 and if needed to the LGA DevKit.
- Press the ON button (or the DSB75 IGT button).

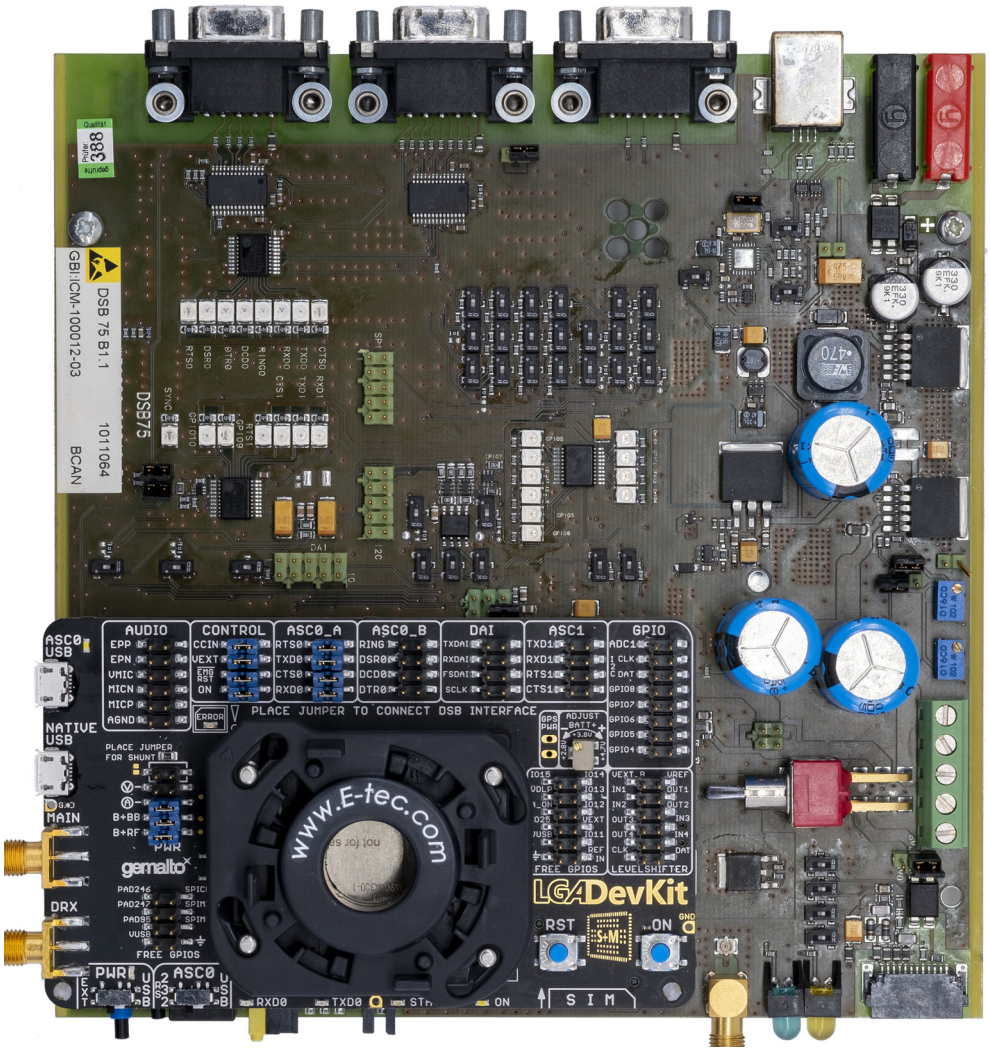

Figure 17: LGA DevKit on DSB75

7 Module Specific Configuration Settings

The following sections describe specific settings that must be taken into account for certain modules.

7.1 BGS1 and BGS2 Operation

BGS2 requires a reference voltage for the I/O domain at VDIG (pad 10 of the LGA106 footprint). Therefore please connect IO25 and VEXT via a jumper.

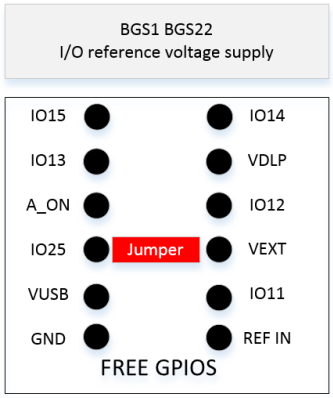

7.2 BGS12 Operation

For a proper start of BGS12 a connection between the module's ON signal (in Control block) and VREF (in level shifter block) is required.

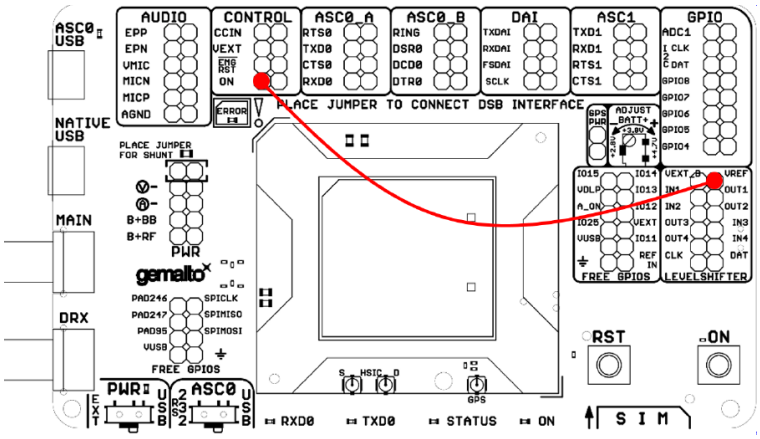

7.3 EMS31 Operation

EMS31-V requires a pull up resistor for the SIM interface that is not automatically detected as with other modules. In order to activate the SIM pull up please use the SIM switch setting on the LGA DevKit's underside as described in Section 4.2.

7.4 ENS22 Operation

To make sure that firmware updates are performed without interruption, the default jumper at "VEXT" at the "CONTROL" pin header must be removed. Instead, this jumper needs to be placed at the "LEVELSHIFTER" pin header to connect "VEXT_B" and "VREF".

Also, with ENS22 the white ON LED blinks only very shortly, and about 3.5 seconds before the module actually starts up.

8 LGA DevKit Firmware Update

The Cinterion® LGA DevKit features an internal processing unit that operates the LGA DevKit as well as the mounted modules - to for instance prevent damage when a module is inserted wrongly.

The processing unit's firmware may have to be updated from time to time in order to be compatible with newer modules. Please get in touch with Thales for the latest firmware.

This chapter guides you step-by-step through the firmware update process for your Cinterion® LGA DevKit via serial interface.

8.1 Connect Serial Interface

The first step connects the appropriate serial interface. On the LGA DevKit's bottom side find the two serial interface test points RX and TX as marked in Figure 18.

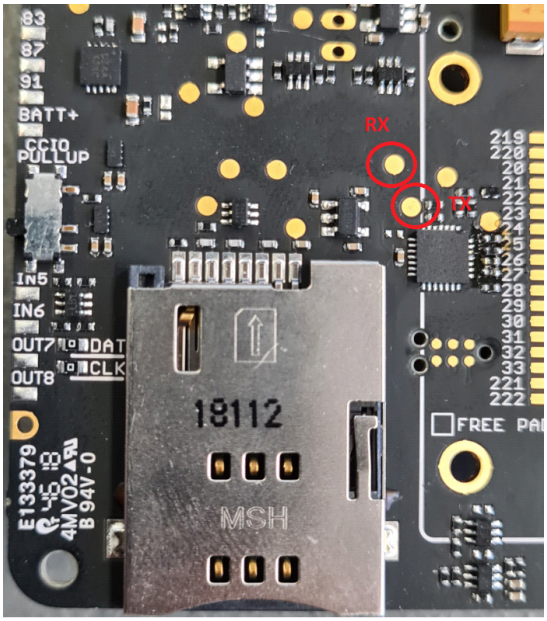

Figure 18: Connect RX and TX test points

Solder jumper wires to the test points, and use an FTDI 3.3V cable, e.g., TTL-232RG-VSW3V3-WE or any 3.3V RS232/TTL converter, to connect RX (Receive from LGA DevKit) and TX (Transmit from LGA DevKit).

8.2 Setup Terminal Program

The second step configures a terminal program to connect to the LGA DevKit. Open a terminal program (the below example uses ZOC and Tera Term).

The following terminal settings are required:

- COM Port -> chose the FTDI VCP under your device manager (in this example COM19)
- Choose 9600 baud with 8N1
- Disable RTS/CTS
- Xon/Xoff handshake on
  Note: The transmit delay between every character in TeraTerm should be set to be >1ms/char and 50ms/line. By default ZoC uses a default setting of 50ms/line. In case of an upload error the char transmit buffer should be set to 1ms/char under the tab *File transfer*.

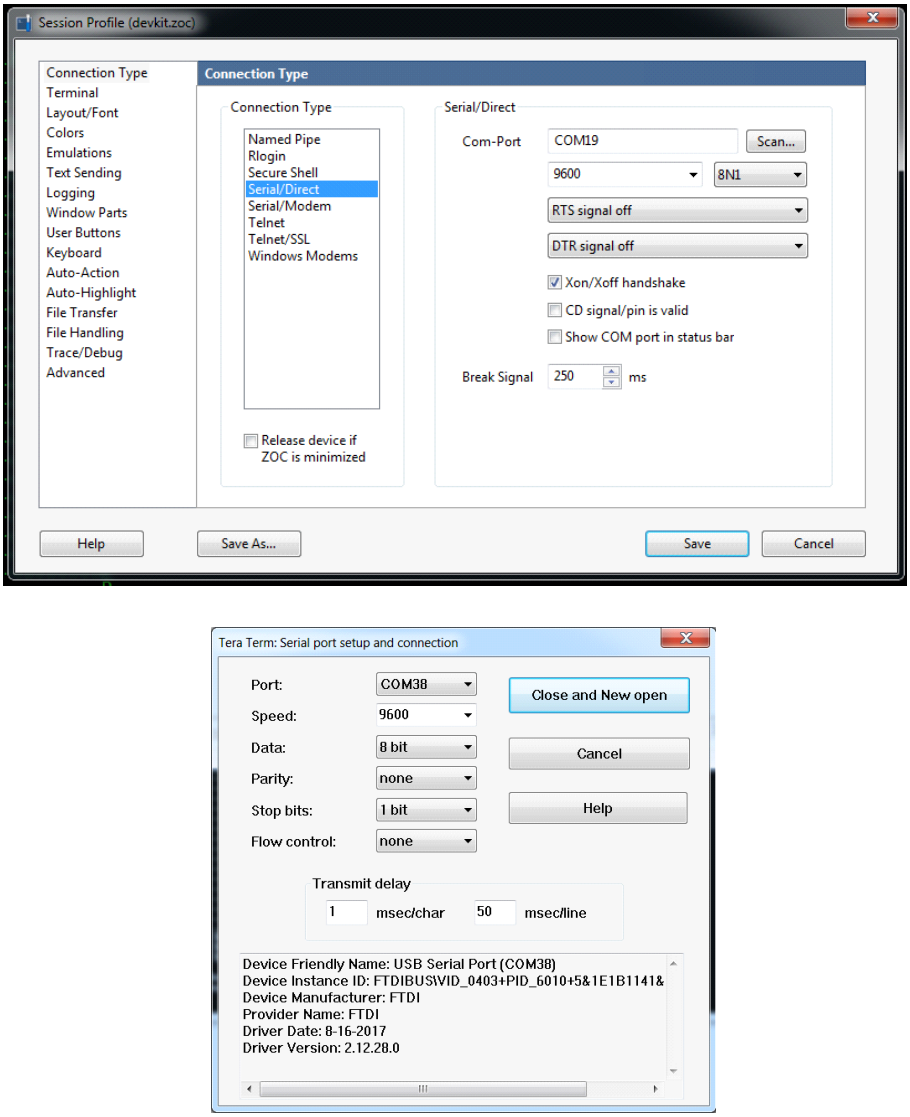

Figure 19: Setup terminal program

8.3 Open Connection and Version Check

The third step opens a connection to the Cinterion® LGA DevKit to check the current firmware version. Open the channel by clicking on "Save".

Now, after powering on the LGA DevKit by simply connecting a USB cable the firmware version should be issued. e.g.,

```
LGA DevKit Bootloader: v1.0.0
LGA DevKit Bootloader: Press ON for Programming Mode
LGA DevKit Bootloader: booting firmware

TX DevKit A1
Firmware Version: 1.0.0
```

8.4 Update Procedure

After having checked the firmware currently running on the Cinterion® LGA DevKit, the fourth and final step completes the update process.

- Bring the LGA DevKit into bootloader mode by:
  - Disconnecting the USB cable from the LGA DevKit (removing the power source)
  - Pressing the ON button continuously and re-plug the USB cable
  - The LGA DevKit now indicates a programming mode by flashing a red LED on its top.

- The LGA DevKit is now ready to receive the update *.hex file as new firmware.

```
LGA DevKit Bootloader: v1.0.0
LGA DevKit Bootloader: Programming mode
LGA DevKit Bootloader: Ready for receiving application .hex file
```

- Open the *.hex firmware with an editor, e.g., Notepad. Mark the complete text and copy it.

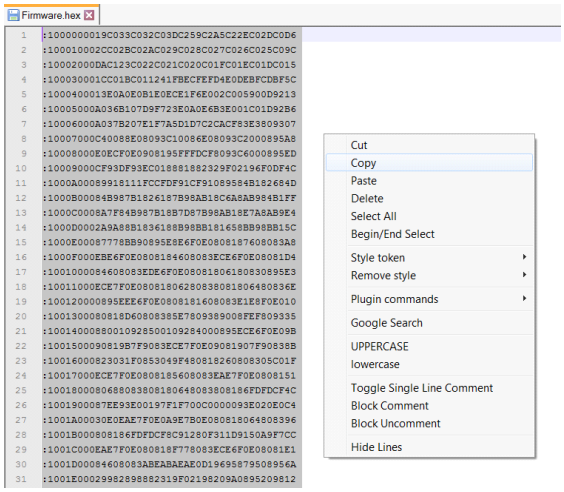

Figure 20: Copy update *.hex file

- Paste the text/firmware into your ZOC or Tera Term terminal.

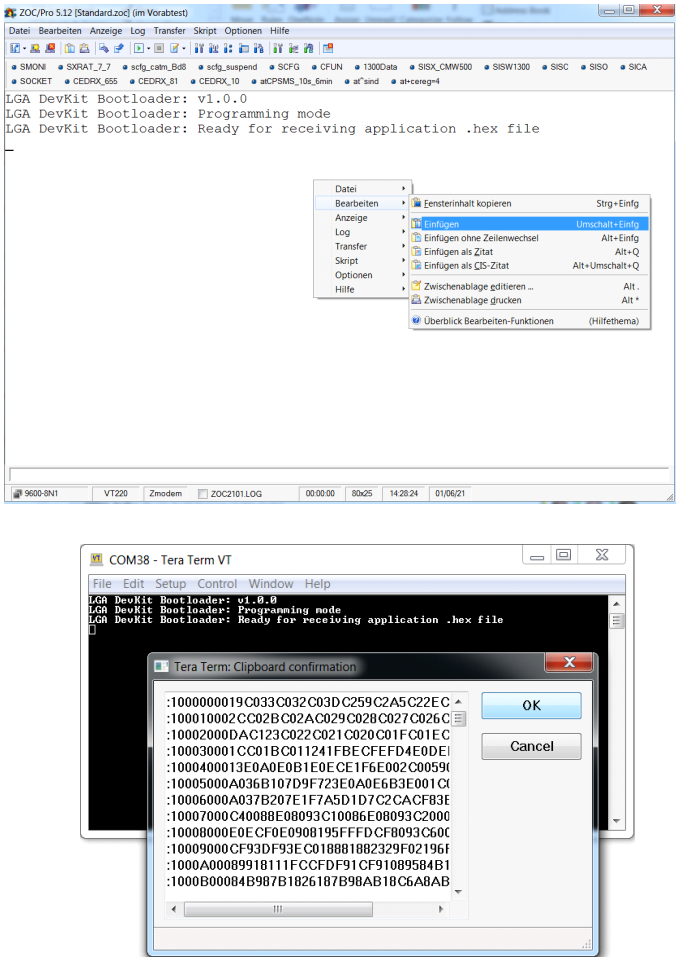

Figure 21: Paste update *.hex file

- Now, you can view the update progress over the connected interface. Finally, the output shows that the new firmware is booting up and displays the new firmware revision string.

```
… more lines in between…

LGA DevKit Bootloader: Press ON for Programming Mode
LGA DevKit Bootloader: booting firmware

TX DevKit A1
Firmware Version: 1.0.1
```

We recommend you to use the ZOC or Tera Term terminal and follow the instructions. With other terminal programs \n \r or spaces during the update process might corrupt the firmware.

In that case you will see a CRC Error and need to repeat the update with the correct settings.

9 Document Information

9.1 Revision History

Preceding document: "Cinterion® LGA DevKit User Guide" v03
New document: "Cinterion® LGA DevKit User Guide" v**04**

Chapter	What is new
8	New chapter LGA DevKit Firmware Update.

Preceding document: "Cinterion® LGA DevKit User Guide" v02
New document: "Cinterion® LGA DevKit User Guide" v03

Chapter	What is new
6.1	Added note regarding additional pull up resistor on DSB Mini.
7.4	Added remark on ENS22 jumper settings required for firmware updates.
10	Added placement and schematics for LGA DevKit L.

Preceding document: "Cinterion® LGA DevKit User Guide" v01
New document: "Cinterion® LGA DevKit User Guide" v02

Chapter	What is new
Throughout document	Revised and updated document.

New document: "Cinterion® LGA DevKit User Guide" v01

Chapter	What is new
---	Initial document setup.

9.2 Related Documents

[1] Hardware Interface Description for your Thales module
[2] AT Command Set for your Thales module

9.3 Safety Precaution Notes

The common safety precautions that apply to mobile phones must also be observed at all times when using this LGA DevKit. Failure to comply with these precautions violates safety standards. Thales assumes no liability for customer's failure to comply with these precautions.

The following is a non-extensive list of the mobile phone and LGA DevKit usage restrictions:

	Pacemaker patients are advised to keep their hand-held mobile away from the pacemaker while it is on.
	Mobile phones must be switched off before boarding an aircraft.
	Mobile phones may not be operated in the presence of flammable gases or fumes
	Interference can occur if mobile phones are used close to TV sets, radios, computers or inadequately shielded equipment
	Do not use your mobile while driving a vehicle
	You should never rely solely upon any wireless device for essential communications, for example for emergency calls

The power supply connected to the LGA DevKit shall be in compliance with the SELV requirements defined in EN 60950-1.

9.4 Regulatory Compliance Information

The Cinterion® LGA DevKit is intended for evaluation and development purposes only, and should therefore only be used in a (laboratory) test environment. The device is not CE approved, and has not been authorized as required by the rules of the FCC. All persons handling the Cinterion® LGA DevKit must be properly trained in electronics and observe good engineering practice standards.

10 Appendix

10.1 LGA DevKit SM

10.1.1 Placement

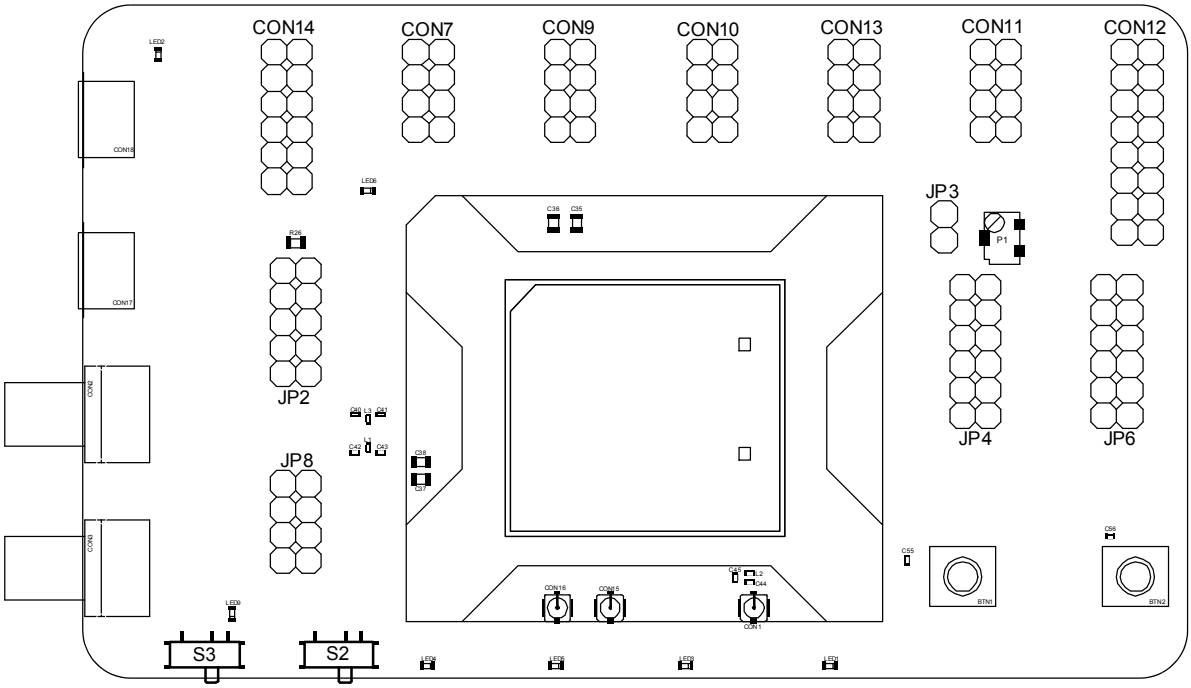

Top view

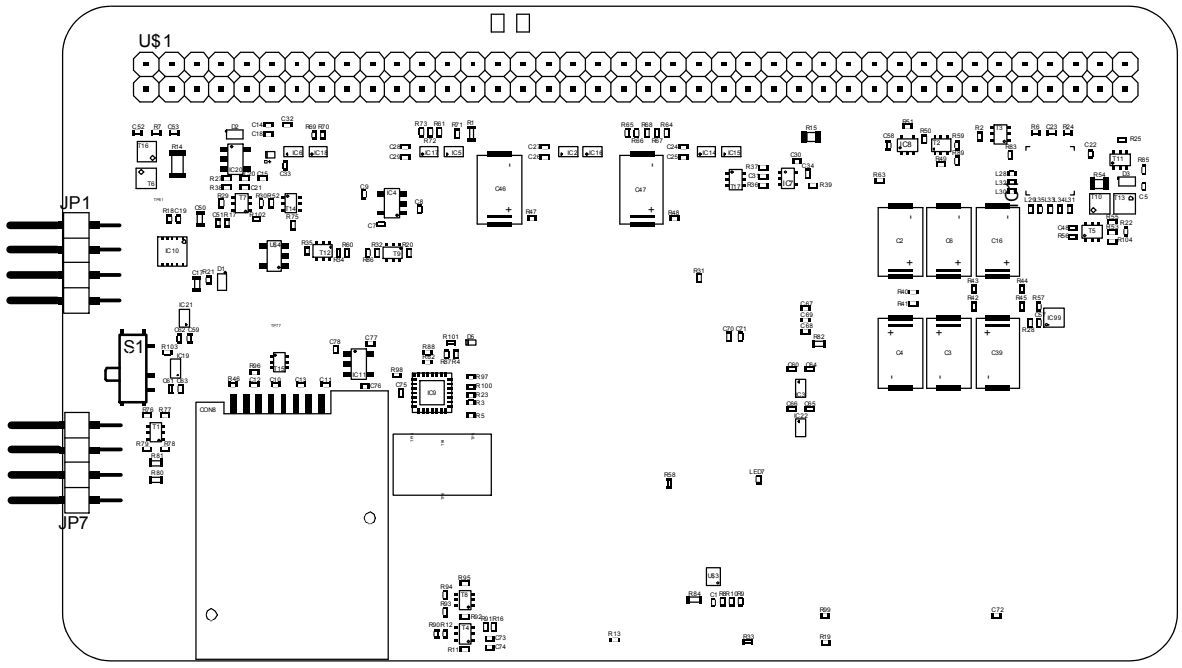

Underside view

Figure 22: Top and underside placements (LGA DevKit SM)

10.1.2 Schematics

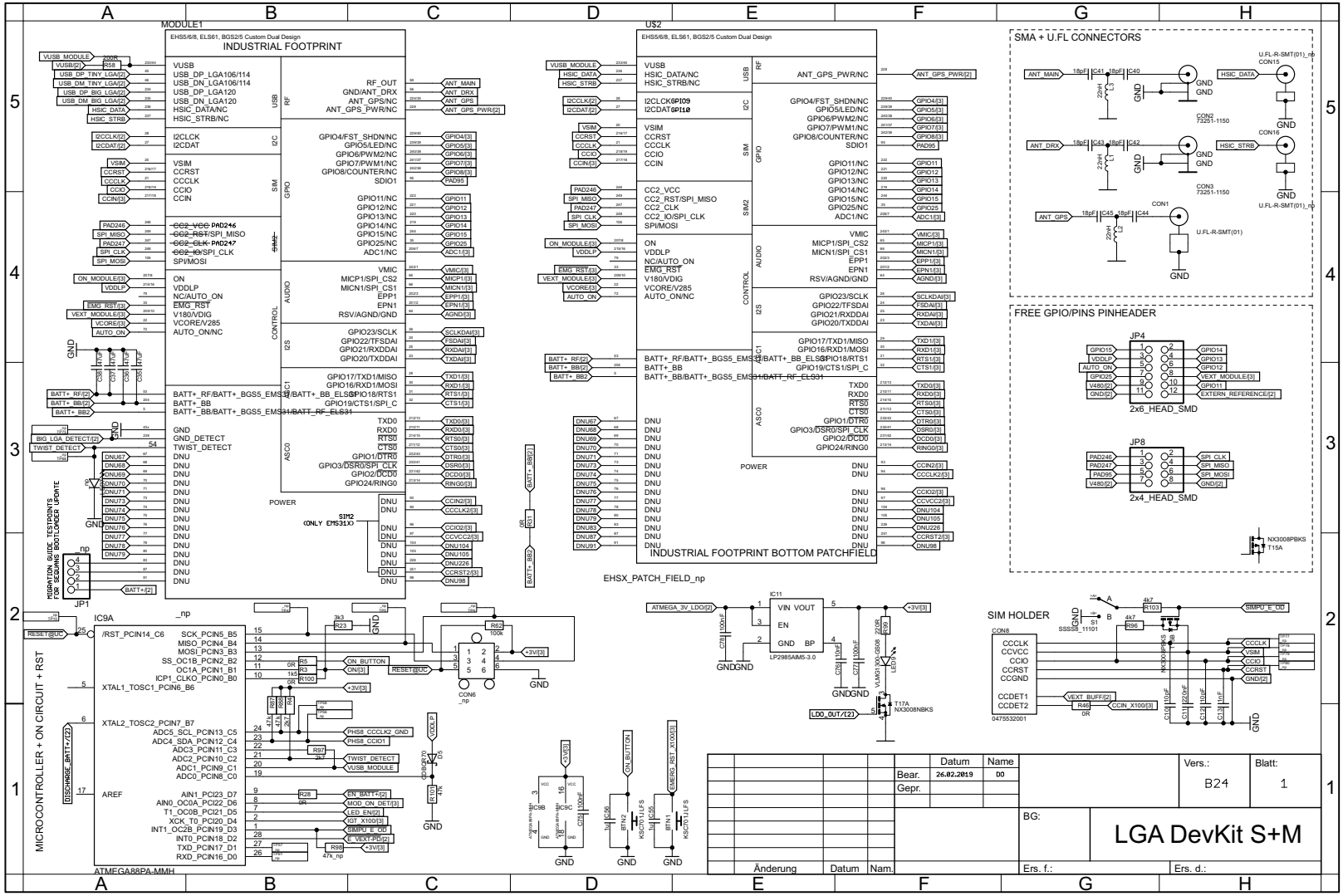

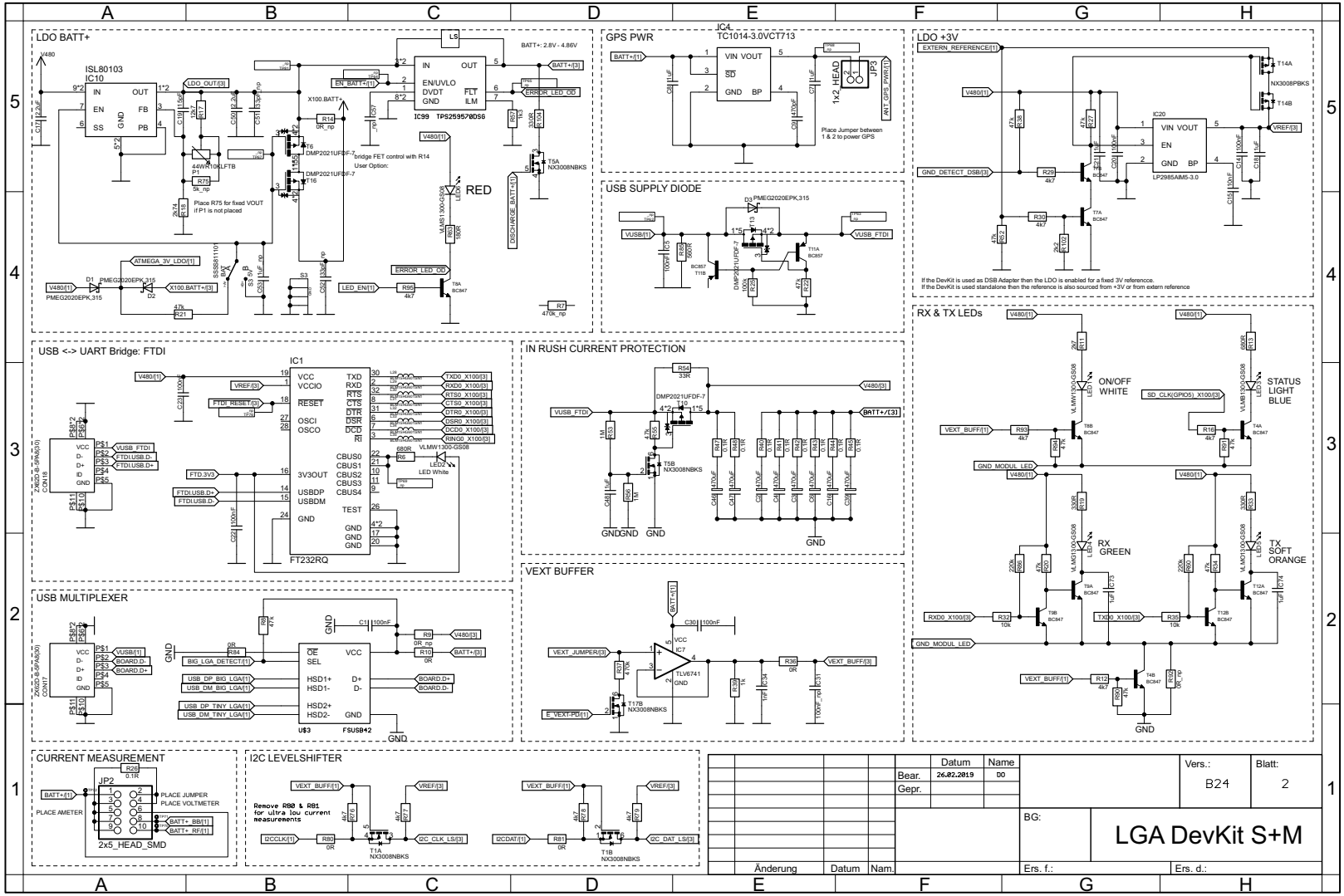
LDO BATT+
ISL80103
IC10
GPS PWR
IC4
TC1014-3.0VCT713
LDO +3V
LP2985AIM5-3.0
USB SUPPLY DIODE
USB <-> UART Bridge: FTDI
IC1
FT232RQ
IN RUSH CURRENT PROTECTION
RX & TX LEDs
ON/OFF WHITE
STATUS LIGHT BLUE
RX GREEN
TX SOFT ORANGE
USB MULTIPLEXER
VEXT BUFFER
CURRENT MEASUREMENT
I2C LEVELSHIFTER
2x5_HEAD_SMD
LGA DevKit S+M
Bear.
Gepr.
Datum
Name
26.02.2019
Vers.:
B24
Blatt:
2
Änderung
Ers. f.:
Ers. d.:

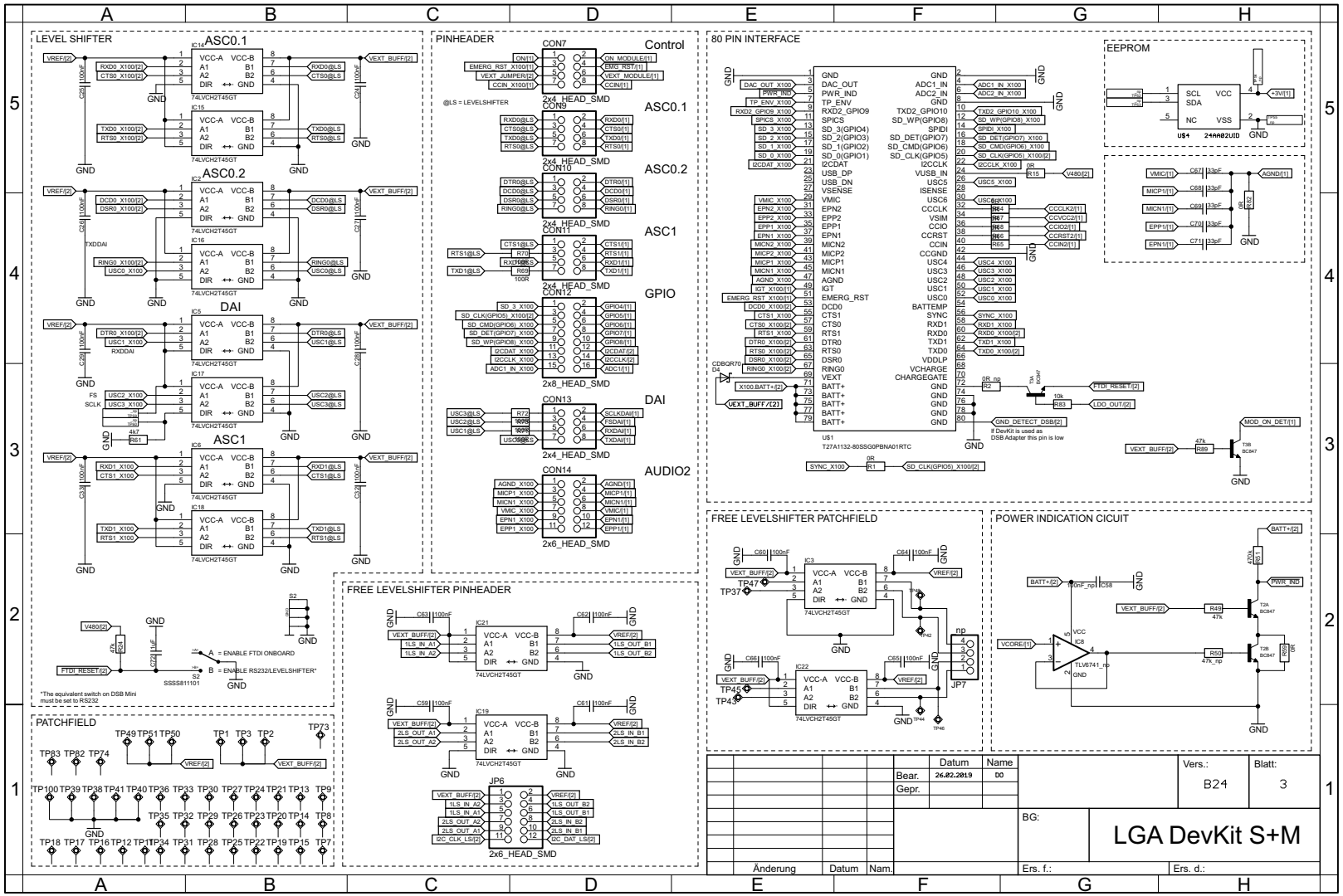
LEVEL SHIFTER
ASC0.1
ASC0.2
DAI
ASC1
PINHEADER
Control
ASC0.1
ASC0.2
ASC1
GPIO
DAI
AUDIO2
80 PIN INTERFACE
EEPROM
FREE LEVELSHIFTER PATCHFIELD
POWER INDICATION CICUIT
FREE LEVELSHIFTER PINHEADER
PATCHFIELD
LGA DevKit S+M
B24
3
26.02.2019
D0

10.2 LGA DevKit L

10.2.1 Placement

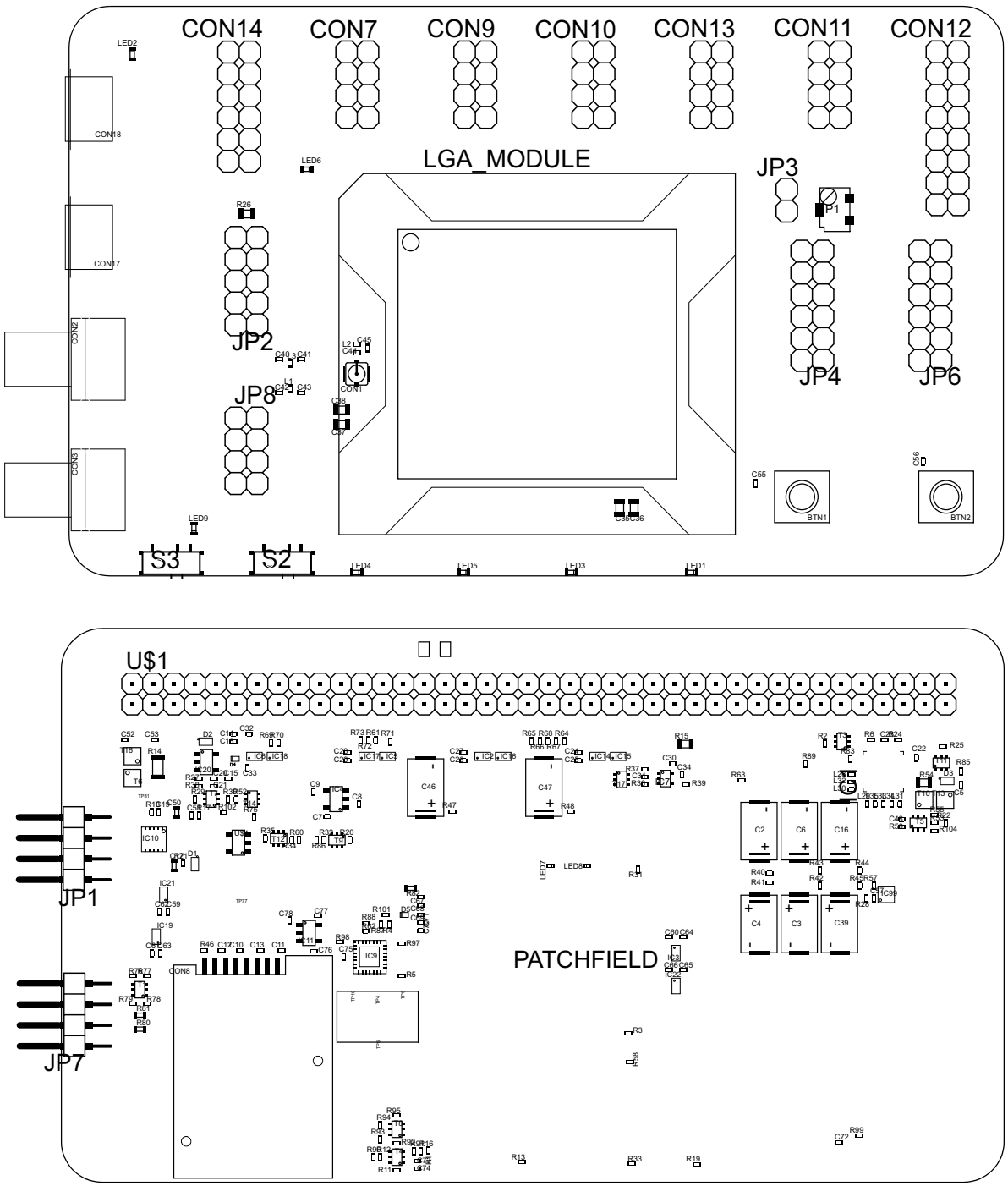

Figure 23: Top and underside placements (LGA DevKit L)

10.2.2 Schematics

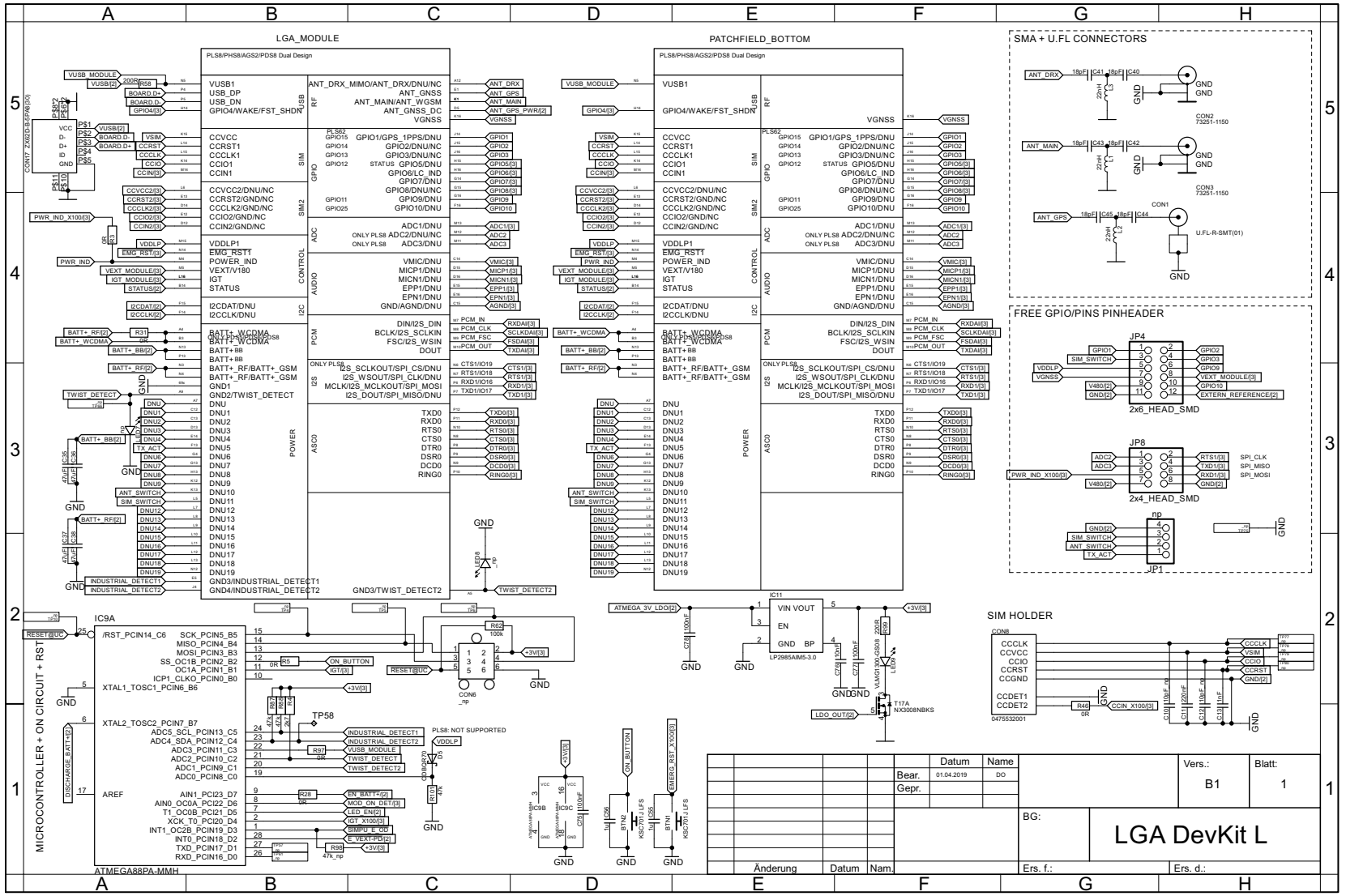

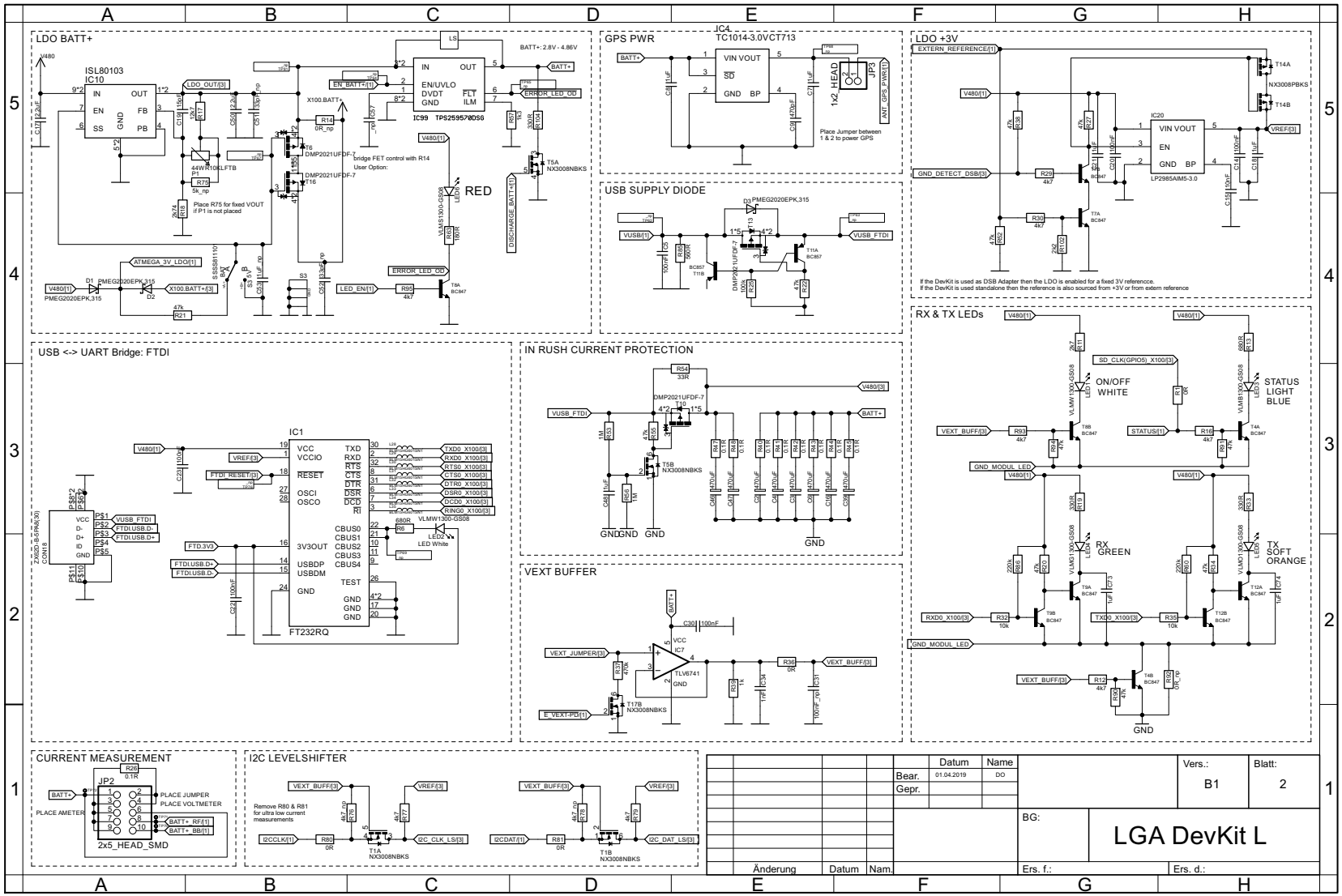
LDO BATT+
ISL80103
IC10
BATT+: 2.8V - 4.86V
bridge FET control with R14
User Option:
Place R75 for fixed VOUT if P1 is not placed
RED
GPS PWR
IC4
TC1014-3.0VCT713
Place Jumper between 1 & 2 to power GPS
USB SUPPLY DIODE
LDO +3V
IC20
LP2985AIM5-3.0
If the DevKit is used as DSB Adapter then the LDO is enabled for a fixed 3V reference.
If the DevKit is used standalone then the reference is also sourced from +3V or from extern reference
USB <-> UART Bridge: FTDI
IC1
FT232RQ
IN RUSH CURRENT PROTECTION
VEXT BUFFER
RX & TX LEDs
ON/OFF WHITE
STATUS LIGHT BLUE
RX GREEN
TX SOFT ORANGE
CURRENT MEASUREMENT
I2C LEVELSHIFTER
Remove R80 & R81 for ultra low current measurements
LGA DevKit L
Bear.
Gepr.
Datum
01.04.2019
Name
DO
Vers.:
B1
Blatt:
2
BG:
Ers. f.:
Ers. d.:
Änderung
Datum
Nam.

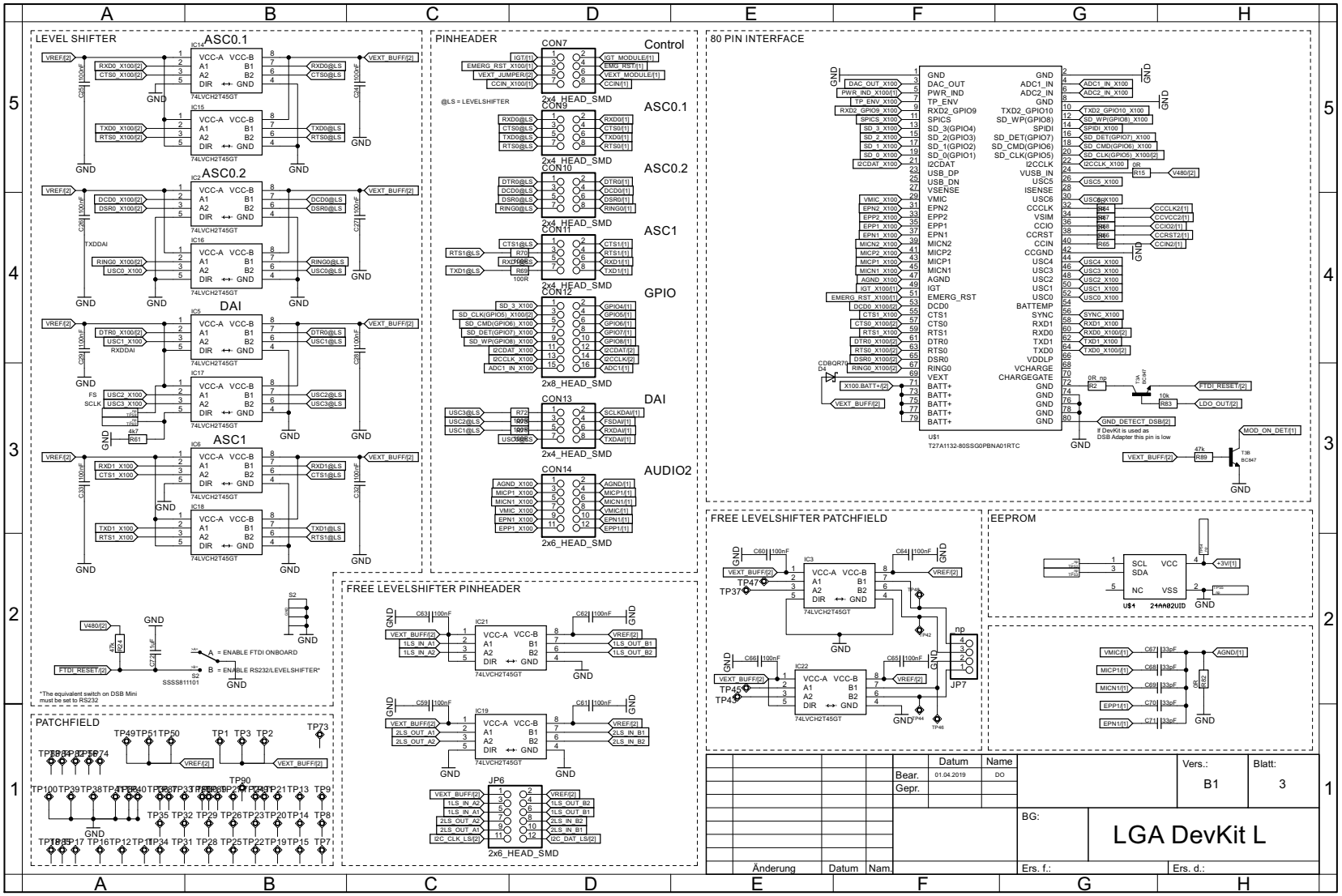
LEVEL SHIFTER
ASC0.1
ASC0.2
DAI
ASC1
PINHEADER
CON7 Control
CON9 ASC0.1
CON10 ASC0.2
CON11 ASC1
CON12 GPIO
CON13 DAI
CON14 AUDIO2
80 PIN INTERFACE
FREE LEVELSHIFTER PINHEADER
FREE LEVELSHIFTER PATCHFIELD
EEPROM
PATCHFIELD
JP6
JP7
LGA DevKit L
Vers.: B1
Blatt: 3
2021-01-12

10.3 Errata/Troubleshooting

PCB22/23 with DSB-Mini as Expander Board - ON LED
With the LGA DevKit version B22/23 - built in smaller quantities - a current back feeding causes a constantly glowing WHITE ON LED. There is no impact in functionality.

PCB B22 Module Rotation Detecting Limited
The LGA DevKit's PCB revision B22 - built in a smaller quantity - has a limited rotation detecting. If the DevKit is powered by native USB and the module is inserted upside down, the error detecting is limited and may allow drawing a limited current (max 20mA) into pad#11/212. The module may get damaged. This limitation is fixed in B24.

PCB B22 Footprint Detection Limited
The LGA DevKit's PCB revision B22 - built in a smaller quantity - has a limited footprint detection. Modules with bold lettering "QUALCOMM" (e.g., EXS81) or wrongly positioned RohS symbol (e.g., ELS61/81) on the module's underside, might be detected as a wrong footprint and will therefore not be powered-up. This limitation has been improved in conjunction with the socket's module footprint.

PCB B22 Error LED/ TXD0 LED
The LGA DevKit's PCB revision B22 has a softly glowing error LED. Also, when no module is inserted the TXD0 LED glows softly. This optical defect is fixed in B24.

PCB B22 Marking
With the LGA DevKit's PCB revision B22 the following markings are swapped:
- DAT and CLK at the GPIO pin headers
- IO13 and VDLP at the FREE GPIOS pin headers

RF Path Matching
The LGA DevKit socket characteristics were improved with regard to module supply path resistance and RF characteristics. There is a smaller quantity built without these improvements.

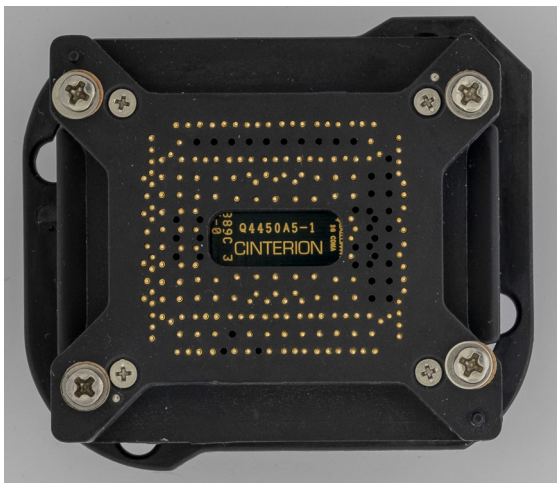

Socket (old)

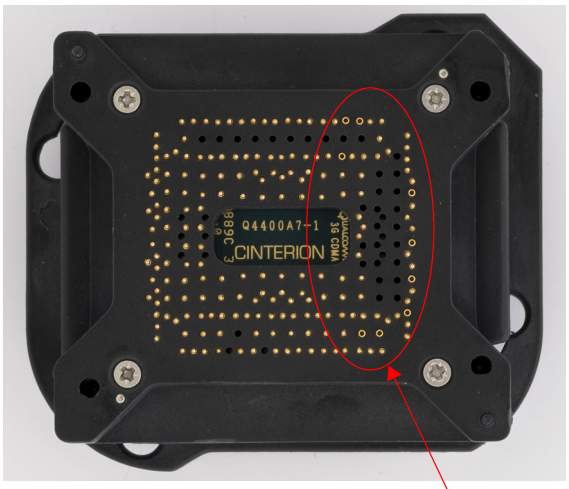

Socket (new)

Improved spring contacts

The old LGA DevKit socket has a decreased RF matching that is improved with the new socket. The below Figure 24 and Figure 25 shows measurements with the old LGA DevKit socket regarding the S11 DevKit's MAIN antenna module RF path as well as the S21 DevKit's MAIN antenna RF path loss. Measurement results for the new LGA DevKit socket are shown above in Section 4.11.

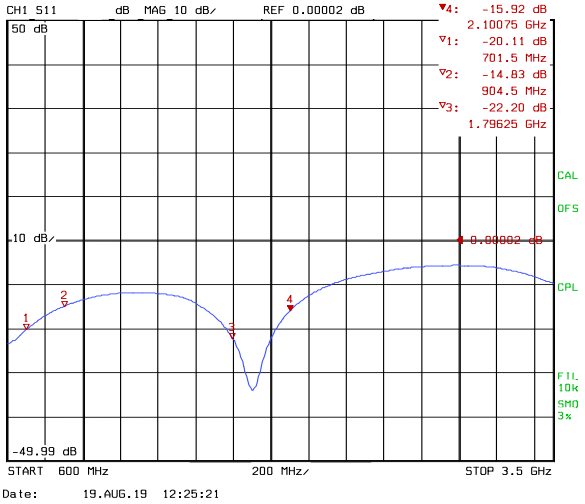

Figure 24: S11 MAIN antenna input return loss transmit direction (with old socket)

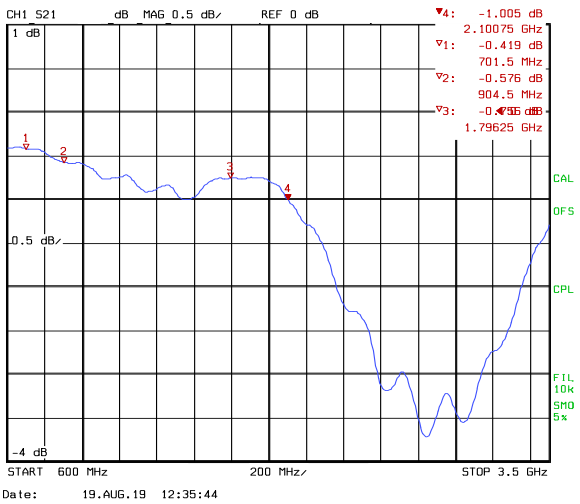

Figure 25: S21 MAIN antenna insertion loss transmit direction (with old socket)

THALES DIS AIS Deutschland GmbH
Werinherstrasse 81
81541 Munich
Germany

THALES

© Thales 2021. All rights reserved. Thales, the Thales logo, are trademarks and service marks of Thales and are registered in certain countries.